ELECTRIC CIRCUIT DIAGRAM

Diagram name ESP-MP-500-V2-4-1-Hannover

Machine / product Mobile Robot MP-500

Base model MP-500

Base version V2.4.1

Customer University of Hannover

Serial number

Customisation
External connectors for additional batteries and devices, USBoard with 5 sensors on top of the mobile platform

Electrical data

Electrical supply data	
Battery charger	TriCom FUTUR mini E24/10
Mains	230 VAC @ 50 Hz
Nominal power (mains)	260 W
Max. current (mains)	3,5 A
Internal energy supply	
Battery voltage (min./nom./max.)	22 V / 24 V / 29 V
Battery capacity	50 Ah
Voltage (platform drives)	24 V (battery)
Voltage (manipulator)	
Voltage (auxiliary axes)	
Auxiliary voltages	5 V, 12 V

Content

Description	Pages
Batteries, charger, external battery connector	2
External connector, USBoard	3
RelayBoard pin layout	4
Connector descriptions	5
Bill of material	6
Drawing	7

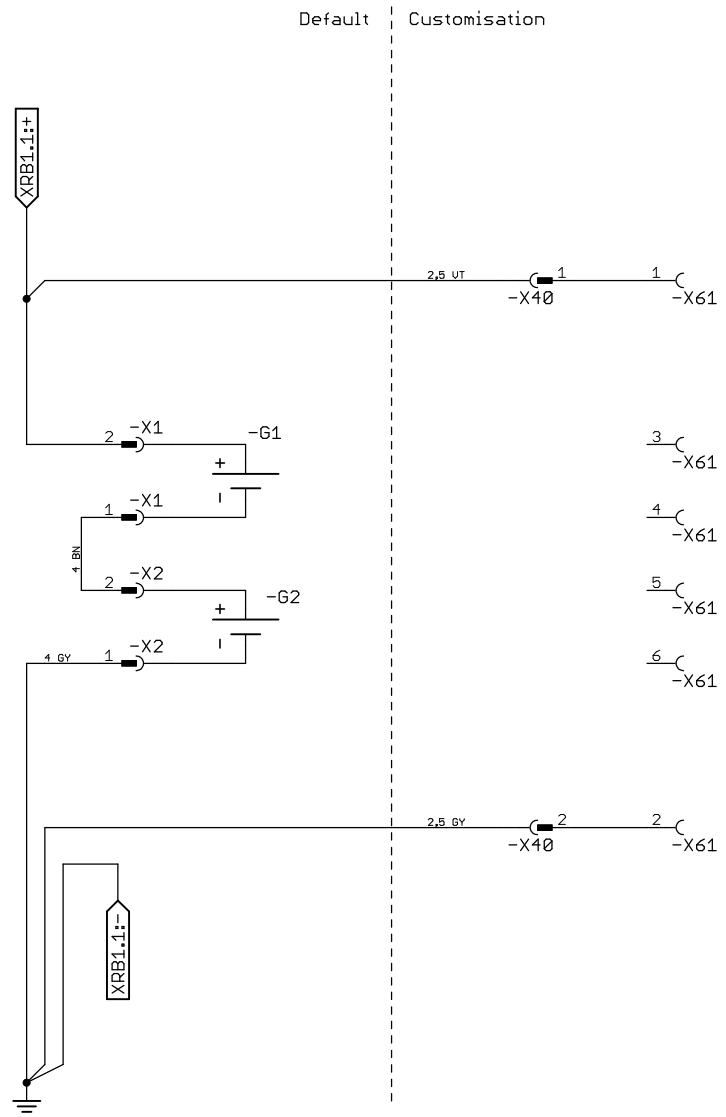

-G1	Battery, 12V, 50Ah	-G2	Battery, 12V, 50Ah

Modification	Date	Name	Date	10.2018	Customer: University of Hannover			Order no.:	Internal no.	File name: ESP-MP-500-V2-4-1-Hannover	
			Editor	FLV	Customer's plan number: /						
			Approv.					Author: Florian Vohr	Diagram name: ESP-MP-500-V2-4-1-Hannover		Page: 2/7
			Stdrd	Neobotix	Origin:	Repl. f.: /	Repl. by:/				

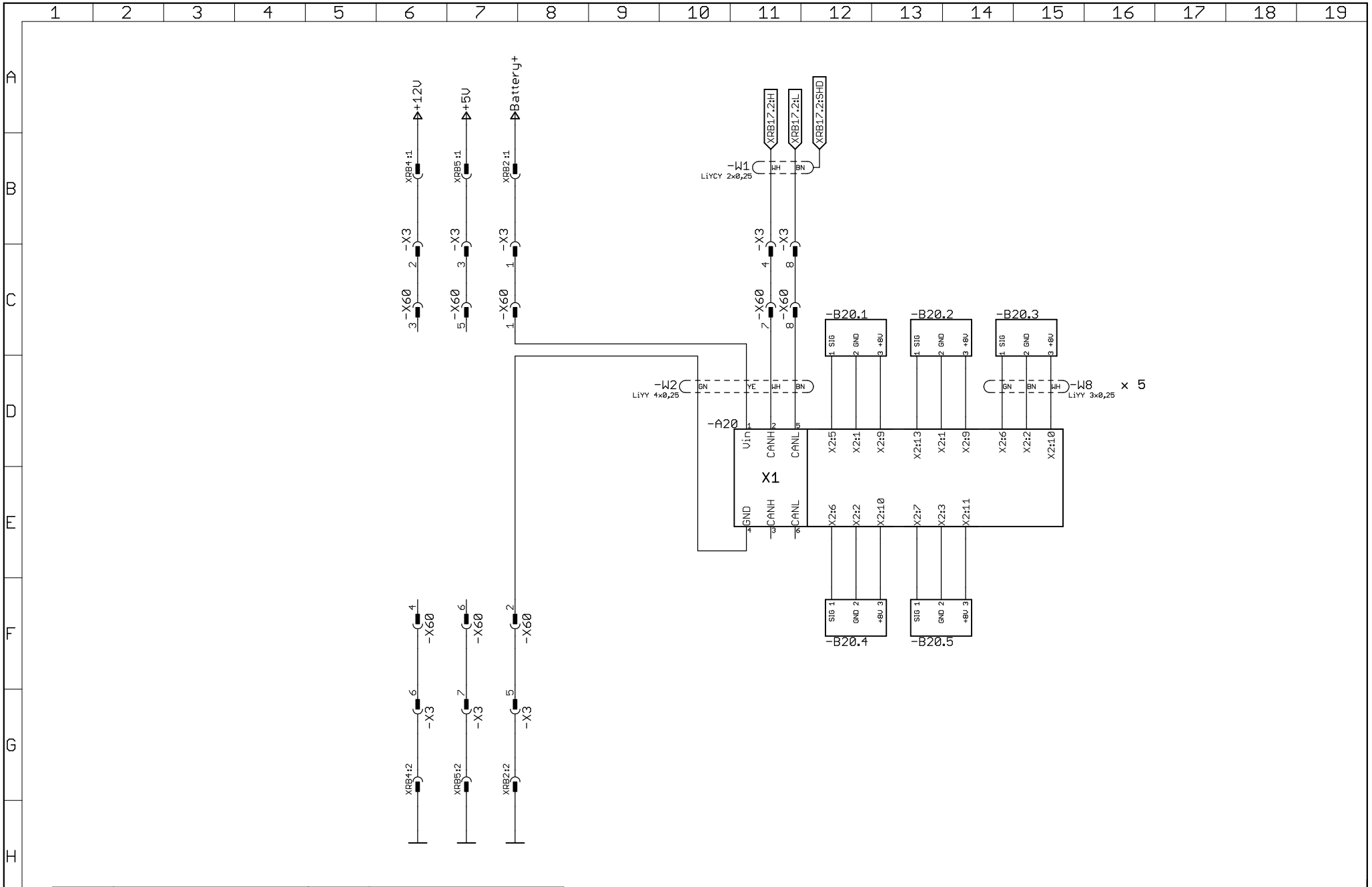

-A20	USBoard	-B20	Ultrasonic sensors

Modification	Date	Name					
			Date	10.2018	Customer: University of Hannover		
			Editor	FLV	Customer's plan number: /		
			Approv.				
			Stdrd	Neobotix	Origin:	Repl. f.: /	Repl. by:/

Order no.:	Internal no.	File name: ESP-MP-500-V2-4-1-Hannover	
Author: Florian Vohr	Diagram name: ESP-MP-500-V2-4-1-Hannover		Page: 3/7

Neobotix RelayBoard V2.2

Connector layout

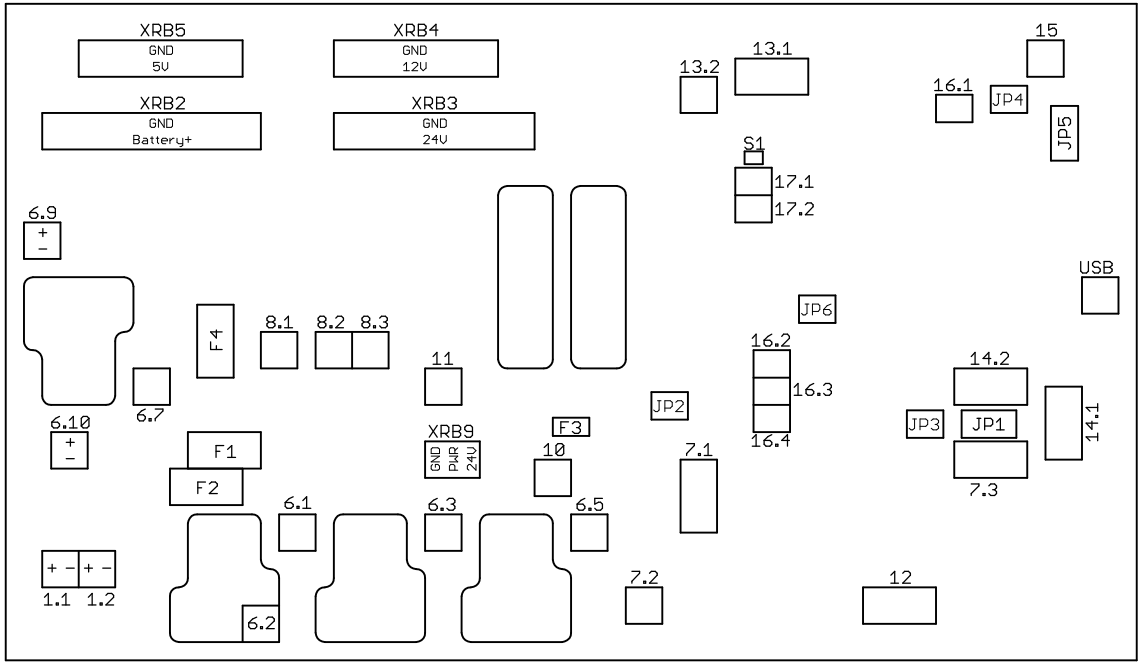

Labelling for all connectors: 'XRB' + Group ID + '.' + Index + ':' + Pin

JP1: Connect [IIII] to switch 24V to S300 digital inputs when using software controlled safety field selection
JP2: Connect 1-2 [:=]to switch XRB7.1 by software, connect 2-3 [=:] to switch at emergency stop
JP3: Connect 1-2 [=:] when using dynamic safety field selection, connect 2-3 [:=] for software controlled selection
JP4: Connect to disable automatic shutdown
JP5: Connect 1-2 [-.] to shut down depending on USB 5V, connect 2-3 [.-] to shut down depending on ATX 5V
JP6: Connect to disable flashing of yellow LED when moving

Modification	Date	Name	Date	10.2018	Customer: University of Hannover			Order no.:	Internal no.	File name: ESP-MP-500-V2-4-1-Hannover	
			Editor	FLV	Customer's plan number: /						
			Approv.					Author: Florian Vohr	Diagram name: ESP-MP-500-V2-4-1-Hannover		Page: 4/7
			Stdrd	Neobotix	Origin:	Repl. f.: /	Repl. by: /				

-X1 Battery connector

/2.8D

Molex MiniFit Sr., 2 pins

Platform — Battery

Pins	Signal	Colour	Wire
1	Battery -	BN	4 mm²
2	Battery +	VT	4 mm²

-X2 Battery connector

/2.8E

Molex MiniFit Sr., 2 pins

Platform — Battery

Pins	Signal	Colour	Wire
1	Battery -	GY	4 mm²
2	Battery +	BN	4 mm²

-X3 Connector function

/3.7C

Molex MiniFit Jr., 8 pins

Hull — RelayBoard

Pins	Signal	Colour	Wire
1	+24V	VT	0,75 mm²
2	+12V	YE	0,75 mm²
3	+5V	RD	0,75 mm²
4	CANH	WH	0,25 mm²
5	GND (24V)	GY	0,75 mm²
6	GND (12V)	BK	0,75 mm²
7	GND (5V)	BK	0,75 mm²
8	CANL	BN	0,25 mm²

-X40 Internal battery connector

/2.11C

Phoenix PC 4

Hull — Batteries

Pins	Signal	Colour	Wire
1	Battery +	VT	2,5 mm²
2	Battery -	GY	2,5 mm²

-X60 Auxiliary connector

/3.7C

EPIC H-D 8

Addon — Platform

Pins	Signal	Colour	Wire
1	+24V	VT	0,75 mm²
2	GND (24V)	GY	0,75 mm²
3	+12V	YE	0,75 mm²
4	GND (12V)	BK	0,75 mm²
5	+5V	RD	0,75 mm²
6	GND (5V)	BK	0,75 mm²
7	CANH	WH	0,25 mm²
8	CANL	BN	0,25 mm²

-X61 External battery connector

/2.13C

Harting Han Q 5/0 F

Addon — Platform

Pins	Signal	Colour	Wire
1	Battery +	VT	2,5 mm²
2	Battery -	GY	2,5 mm²
3	/	/	/ mm²
4	/	/	/ mm²
5	/	/	/ mm²
6/PE	/	/	/ mm²

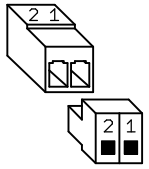

Modification	Date	Name					
			Date	10.2018	Customer: University of Hannover		
			Editor	FLV	Customer's plan number: /		
			Approv.				
			Stdrd	Neobotix	Origin:	Repl. f.: /	Repl. by: /

Order no.:	Internal no.	File name: ESP-MP-500-V2-4-1-Hannover
Author: Florian Vohr	Diagram name: ESP-MP-500-V2-4-1-Hannover	Page: 5/7

Bill of materials

ID	Description	Type	Order number	Manufacturer	Page
-A20	Ultrasonic sensor interface board	USBoard V1.7.3	X100	Neobotix GmbH	/3.11E
-B20	Ultrasonic sensors	ParkPilot USS4	0 263 003 331	Robert Bosch GmbH	/3.12C
-G1	AGM lead acid battery, 12V, 50Ah	12LCP-50	639	AKKU SYS GmbH	/2.9D
-G2	AGM lead acid battery, 12V, 50Ah	12LCP-50	639	AKKU SYS GmbH	/2.9E

Rear

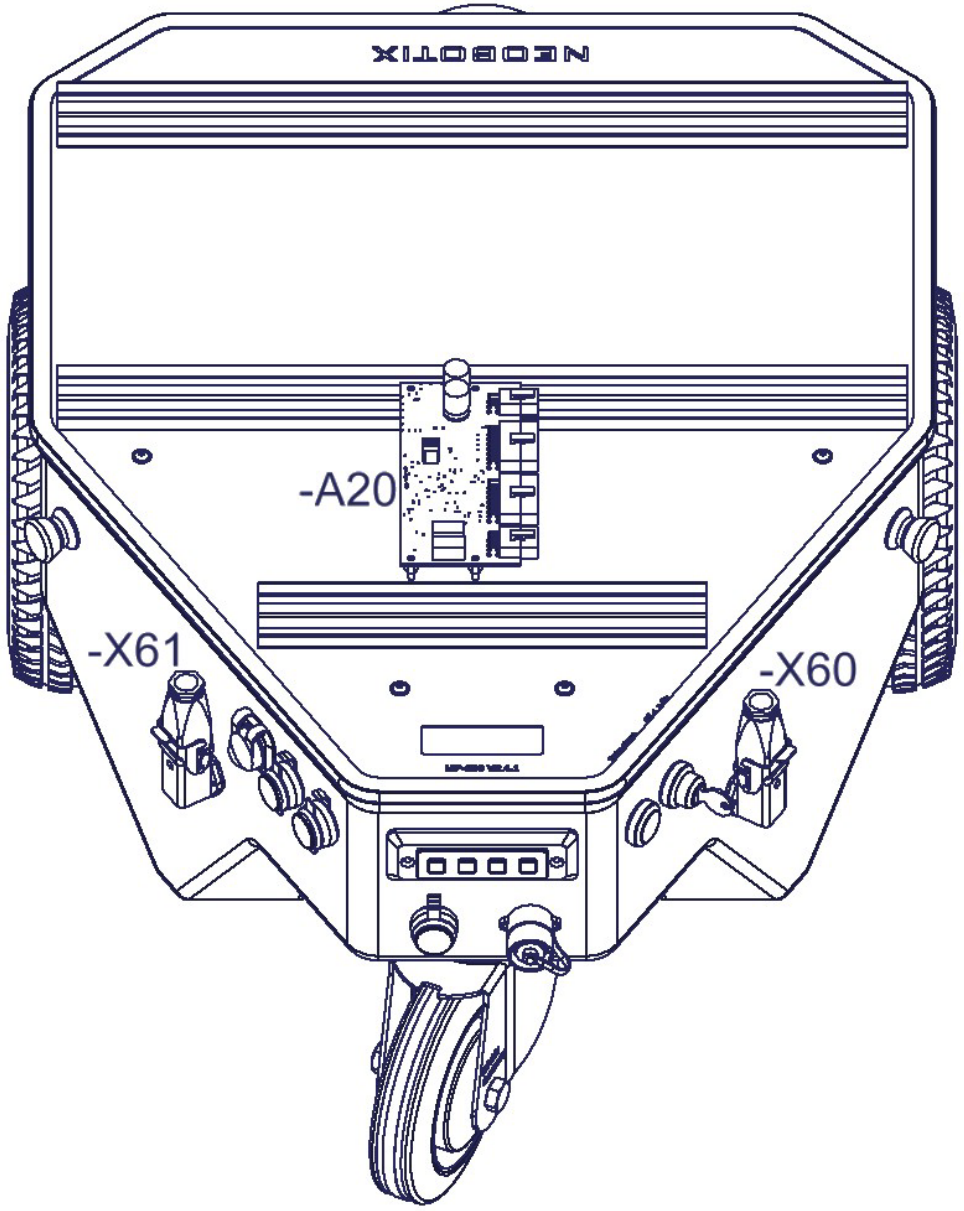

Modification	Date	Name	Date	10.2018	Customer: University of Hannover			Order no.:	Internal no.	File name: ESP-MP-500-V2-4-1-Hannover	
			Editor	FLV	Customer's plan number: /						
			Approv.					Author: Florian Vohr	Diagram name: ESP-MP-500-V2-4-1-Hannover		Page: 7/7
			Stdrd	Neobotix	Origin:	Repl. f.: /	Repl. by: /				